Micronet®
Faster and Easier Networks

Micronet SP915

Wireless LAN Outdoor AP/Bridge

11M Access Point with Inter-Building function for point to multi-point connection

Micronet SP915 Wireless LAN Outdoor AP/Bridge – 11M Wireless LAN Inter-building Access Point, is specially designed for Point-to-Point and Point-to-Multipoint applications, offering campus-wide connections between buildings at a speed of up to 11M. Fully compliant with IEEE 802.11b standard, the Wireless Inter-building Access Point provides powerful features such as waterproof outdoor, SNMP, 802.1x, bandwidth control, station adapter and more.

Key Features

- Solid housing provides protection against rigorous weather conditions
- Compliant with IEEE 802.11 and 802.11b standards
- Provide 1 RJ-45 LAN port of 10/100M
- Support auto data rate selection at 11, 5.5, 2 and 1M for IEEE802.11b
- Support bandwidth and SNMP management control
- Support modulation with Direct Sequence Spread Spectrum (DSSS) technology for 802.11b
- Operate in 2.4GHz frequency band
- Support 64(40)/128 bit WEP, 802.1x and access control list for security
- Support operation mode Infrastructure, Station Adapter and Inter-Building Bridge Function
- Support web-based, telnet and utility management

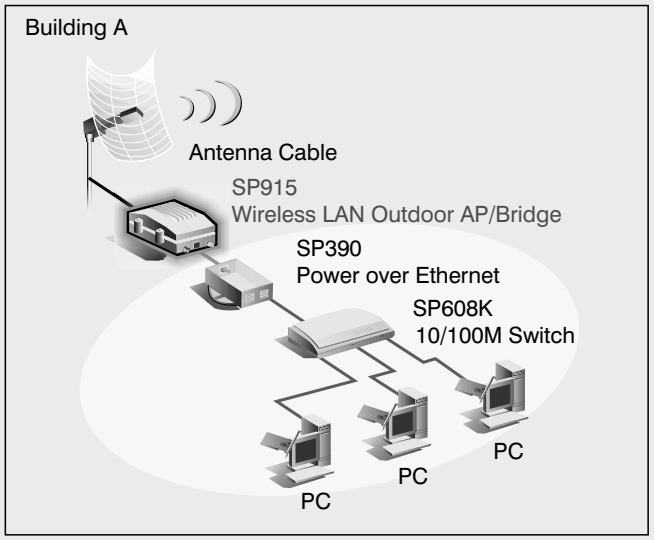

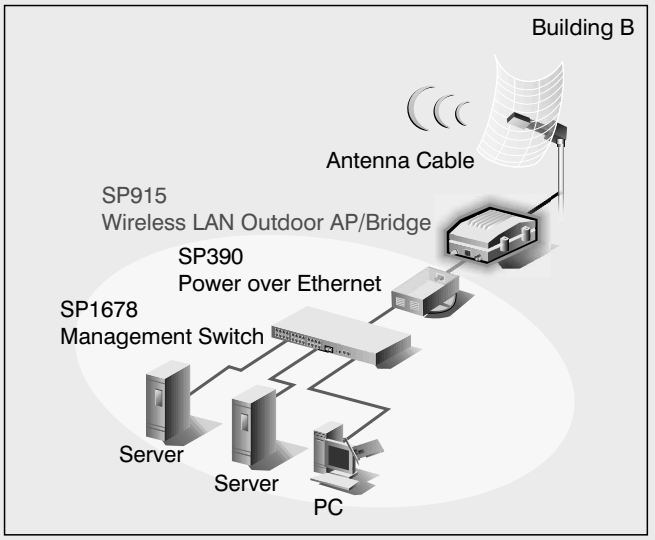

Micronet®
Faster and Easier Networks

Wireless LAN Outdoor AP/Bridge

SPECIFICATION AND PRODUCT FEATURES

Model	SP915-100	SP915-500	SP915-1000
Standard	IEEE 802.11 and 802.11b standards		
LAN Port	1-port of 10/100M		
Antenna Connector	N-type female connector		
Radio Modulation	DSSS		
Frequency Band	2.4 GHz		
Data Rate	11, 5.5, 2 and 1M		
Output Power (Max)	100mW	500mW	1000mW
Antenna Type	Detachable, R-SMA		
Security	64(40)/128bit WEP Encryption, 802.1x and Access Control list		
Operation Channel	11/N. America (FCC), 13/Europe (ETSI), 14/Japan (Telco)		
Operation Mode	Infrastructure, Station Adapter and Inter-Building Bridge mode		
Advance Feature	Bandwidth Control and SNMP management		
Management	Windows-Based Utility, Web-Based and Telnet		
Power	DC 12V, 2A		
Dimension (mm)	280 x 230 x 116		
Gross Weight (kg)	2.8		
Operating Temperature (°C)	0°C ~ 60°C		
Operating Humidity	5% ~ 85%		
Emission	CE, FCC		

The product specifications are subject to change without prior notice

ORDERING INFORMATION

Model	Description
SP915-100	Wireless LAN Outdoor AP/Bridge, 100mW
SP915-500	Wireless LAN Outdoor AP/Bridge, 500mW
SP915-1000	Wireless LAN Outdoor AP/Bridge, 1000mW

SP915 Wireless LAN Outdoor AP/Bridge

1. N-Type Antenna Connector
2. RJ-45 LAN Port

COMPANION PRODUCTS

Consider the following Micronet products as a factor in your network planning.

- 56K Modem
- ADSL and Broadband
- Internet Camera
- ISDN TA / Router
- KVM Switch
- Media Converter
- Network Interface Card
- PCMCIA and Compact Flash
- Print Server
- Switch and Hub
- USB Device Family
- VDSL
- VoIP Telephony
- Wireless LAN
- Wiring System

Copyright © 2004 Micronet Communications Inc. All technical information in this document is subject to change without prior notice. Micronet, EtherFast and MicroView are registered trademarks of Micronet Communications Inc. Microsoft, Windows, Windows 95, Windows 98, Windows NT, Windows 2000 are registered trademarks of Microsoft Corporation. Novell and Netware are registered trademarks of Novell Inc. All other trademarks and registered trademarks are properties of their respective holders.

Distributor:

TÜV CERT
ISO 9001

Manufacturer and Exporter
Spectrum Technologies Corp.
E-mail: sales@micronet.info; support@micronet.info Web:http://www.micronet.info